E9

Top-quality sterilisation, designed to meet your needs

4 **E9**
Functional, reliable and always connected

6 **Connectivity**
A connected system for effective operation

8 **Traceability**
Expandable, to adapt to your needs

10 **Reliability**
Technology at the service of safety

12 **Functional**
Designed for top performance

14 **Smart**
The pleasure of a simple gesture

16 **Inspectable**
For complete, convenient cleaning

18 **Accessories**
Starter kit
Tests
Optional tray holders

20 **Traceability and retrieving**
Print Set 1
Print Set 2
Print Set 3
E-WiFi
E-Data & E-Memory software

21 **Water treatment**
Aquaosmo
Aquafilter 1 to 1
Aquadist
Aquabox

24 **Sterilisation cycles and personal functions**

26 **Technical data and technical specifications**

Euronda Pro System
Products, Process, Protection

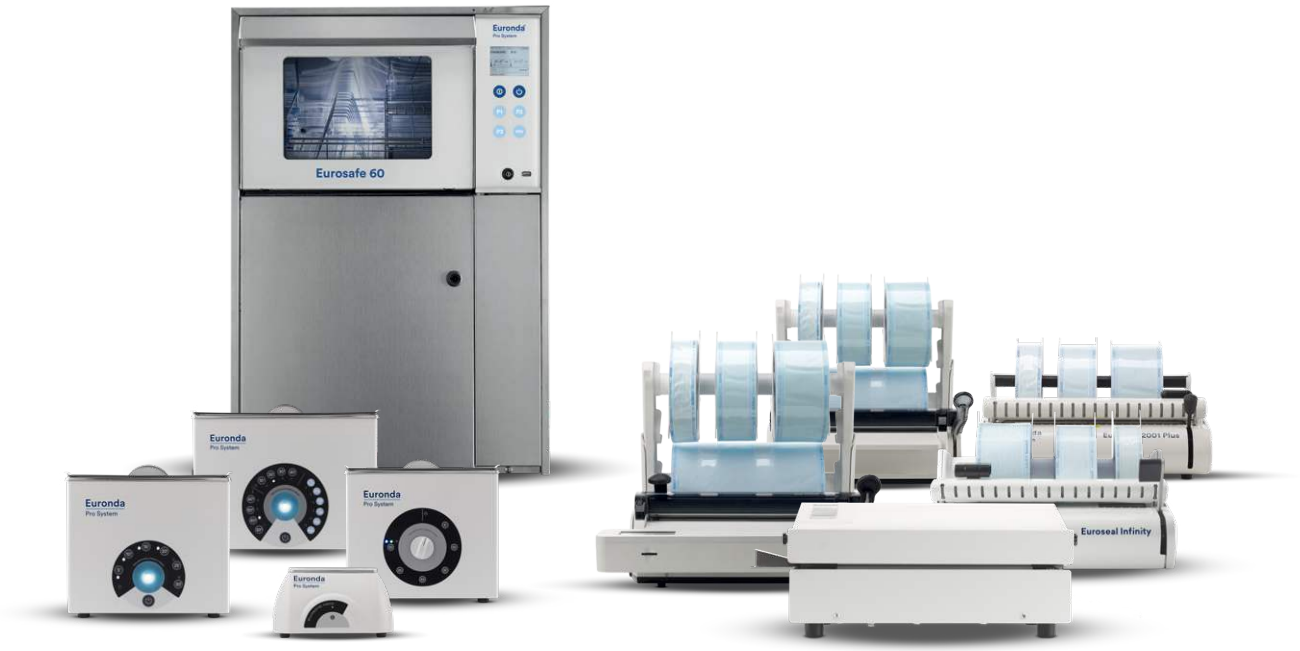

Cleaning

Thermal disinfection

Eurosafe 60

Ultrasonic washing

Eurosonic® 4D
Eurosonic® 3D
Eurosonic® Energy
Eurosonic® Micro

Packing

Thermosealing

Euromatic®
Euroseal® Valida
Euroseal® Infinity
Euroseal®
Euroseal® 2001 Plus

Sterilization rolls

Euroseal® Check

Euronda Pro System is a Total Protection System for dental practices that has been developed to ensure the safety of staff, patients, instruments and working environments. The steps of the sterilization process - from collection to storage - can be successful only if carried out properly.
Thanks to the Pro System line, it is possible to implement a cutting-edge, effective and efficient protocol that can be followed on a regular basis and increase the safety of a practice while optimizing its resources.

Sterilization

Autoclaves

E10
EXL
E9
E8

Tests

Traceability / Retrieving

Water treatment

Aquaosmo
Aquafilter 1 to 1
Aquadist
Aquabox

E9

Functional, reliable and always connected

E9 embodies all Euronda's experience in the production of autoclaves, creating a machine that teams extreme reliability with the most modern concepts of connectivity and complete traceability. The simple, clean-cut design and the advanced planning and design approach are just the first, most immediate indications of a quality device with plenty to discover. The choice and assembly of the materials make E9 a strong, extremely functional, long-lasting autoclave. What really makes it unique, however, are the various connectivity and traceability options it offers.

Connectivity

The integrated SD Card and the Ethernet or WiFi connection (optional) ensure the data on sterilisation cycles are always available.

Traceability

With three Print Sets for printing adhesive labels, which can also be added after purchase.

Reliable

E9 is the result of the constant improvements made to each of the components, to offer maximum reliability and efficacy.

Functional

Designed inside and out to offer maximum efficiency and lasting quality.

Smart

The clear icons on the touch screen display make all programming and customisation operations quick and intuitive.

Inspectable

Rapid, intuitive system for opening and accessing the tank compartment, so it can easily be cleaned as often as necessary.

The total connection to other systems present in the clinic is a fundamental requisite Euronda research has always specifically focused on. This is why we have made it increasingly quick and easy to connect E9 with other Pro System devices, such as the thermosealing machine Euroseal® Valida and the thermodisinfector Eurosafe 60.

Connectivity
A connected system for effective operation

Expandable connectivity

The total connectivity offered by SD Card, Ethernet and optional E-WiFi kit ensures the sterilisation results are always available on your PC, printers, smartphone and tablet, creating a network (WAN) to share data and resources.

Connected data management

The optional E-WiFi kit can be used to connect the Pro System devices with each other and to a computer, tablet or smartphone. With E-WiFi, all data are available and updated on the computerised sterilisation register. The E-Link software, included in the kit, is easy to install on a Windows or iOS operating system, allowing you to control up to five Euronda devices equipped with the E-WiFi kit.

The future of sterilisation

Connect two or more autoclaves and the other Euronda Pro System devices to the management software to trace all the data and attach them to the patient's file. The E-Data software is available for both Windows and iOS, and can be configured with the main management software present on the market, such as: Dios, Segosoft, Julie, Visiodent and Kodak.

Traceability
Expandable, to adapt to your needs

With E9, the concept of traceability becomes expandable and can be adapted to all your needs, either from the time of purchase or subsequently, when you find it useful to integrate the autoclave with one of the three Print Sets available. These are easy to install, and do not require specialised technical support. Two Print Sets can be integrated into the body of the machine, and do not take up room, for improved convenience in the sterilisation room.

Keep track of everything

Even the basic version of E9 traces each sterilisation cycle, thanks to the SD Card and Ethernet connection, in compliance with the EN 13060 standard. The SD Card storage system means you can save data and move them from the Card to the Computer.

Validation and release of loading

E9 can digitally register the compliance of the sterilisation process at both the loading and discharging stages. The operator will check that the pouches are undamaged and dry, the condition of the instruments and that the sterilisation parameters have been complied with.

Integrable printers

The expandable traceability system allows for the integration of three different types of printers, depending on the characteristics required. The traceability in E9 adapts to the needs of each practice, guaranteeing the control and safety standards established by law.

Print Set 1
Internal printer with thermal paper.

Print Set 2
Internal printer for adhesive labels.

Print Set 3
External printer for large amounts of adhesive labels.

The E9 is equipped with a control system and cutting-edge technologies that safeguard and guarantee safe processes and results, ensuring the autoclave remains functional and efficient over time.

Reliability
Technology at the service of safety

Conductivity meter

The integrated conductivity sensor monitors the quality of the water: if it is not of adequate quality, E9 informs the operator with a message on the display.

Air-water separator

The air-water separator, integrated into the tank unit, is a lifesaver for the vacuum pump. The pumps used on machines of this level are indispensable for proper sterilisation, but they are very delicate, because they are under attack from flows containing steam at high temperatures, air, dirt and chemical residue from the instruments to be sterilised. The device separates the air from the other components before it enters the vacuum pump, which is thus able to operate in ideal conditions, maintaining the efficiency of the device.

Dirt Control System

The dirt control system in the hydraulic circuit of E9 allows for an accurate separation of the flows of clean and dirty water. This allows the dirt to flow easily out of the hydraulic circuit, discharging it directly into the used water tank, so that the autoclave can continue to operate without difficulty.

Functional
Designed for top performance

The care invested in designing E9 makes this autoclave a model in terms of ergonomics, efficiency and user-friendliness. E9 has been designed to guarantee excellent, lasting performance, optimising procedures and consumption, with a particular focus on facilitating rapid inspection and maintenance.

Eco-Friendly

E9 optimises water and electricity consumption, thanks to technologies that make it possible to interpret the effective load inserted, adapting the sterilisation perimeters and allowing you to save water, energy and time.

Performance and safety

The instant steam generator makes it possible to improve water consumption based on load, and guarantees excellent performance, for a quick, safe, top-quality sterilisation process. Thanks to the joint effort of the steam generator and the heat resistors, E9 guarantees perfect drying.

Modular structure

The modular structure and the logical arrangement of the internal components allow for quick, easy access to all the internal components of the machine, so that each individual part of the autoclave can be reached, cleaned and maintained.

Innovative and clear-cut design

It can contain up to five trays

Smart
The pleasure of a simple gesture

E9 makes technology even simpler and more intuitive. You'll discover the pleasure of using an autoclave that's truly user-friendly and intuitive, offering all the functions you need to do your job effectively.

Assistance software

E9 is equipped with a series of software applications to facilitate installation, diagnosis and maintenance for technicians. This guarantees top performance every time, cutting the time and costs for work on the machine.

Smart technology that simplifies operations

E9 runs five type B cycles (121°, 134°, 134° Prion, 134° Rapid, 134° Rapid Prion) and three test cycles (Vacuum, Helix, Bowie and Dick). With the Rapid cycle, hollow and porous instruments, placed in pouches, can be sterilised in just 25 minutes. Thanks to the Personal functions, you can also run Light (type N) and Light & Stock (type S) cycles.

It's all in your hands

The system of clear, simple icons on the touchscreen display allows you to control operations quickly and intuitively. The new, clearly visible applications menu guarantees an unprecedented level of customisation, allowing you to interact with the machine by creating your own menu and professional process.

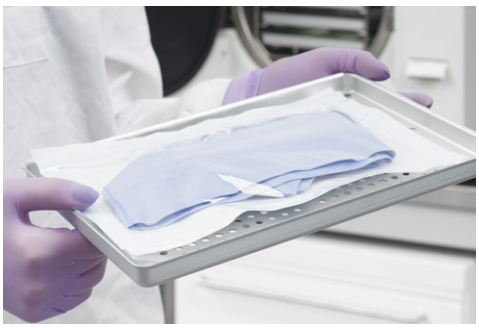

Trays included

Soft touch screen

Inspectable
For complete, convenient cleaning

Since we invented the first inspectable tank, Euronda has continued to develop the concept of inspectability.
E9 confirms this: the system for opening and accessing the tank compartment is extremely quick and easy, to facilitate regular cleaning even for the less experienced, guaranteeing safe, effective sterilisation every time for many years.

Inspection® System

Access to the tank compartment is extremely quick and easy, thanks to the Inspection® System, which facilitates operations on the tank unit in the top part of the machine, in full compliance with the EN 13060 standard.

Functional lid

The top lid of E9, made from an innovative technopolymer, is attached with a clever interlocking system, so it can be opened at any time, facilitating disassembly and verification.

Easily accessible

The side panels, made from latest-generation material, are extremely easy to remove. This also makes inspection and maintenance simpler, quicker and more efficient.

System for quick accessing the tank

Starter kit included

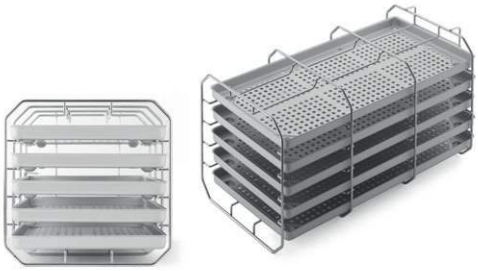

Standard tray holder

Square profile steel tray holder with a capacity of five standard aluminium trays. If rotated by 90°, it can hold three sterilisation cassettes.

Dimensions (wxhxd):
186 x 22 x 379 mm
Five trays included

- Drainage pipes
- Sponge
- Tray removal handle
- Door adjustment handle
- Funnel
- Replacement bacteria filter

Tests

Helix Test

Test for Class B autoclaves to evaluate the capacity of penetration of the steam in hollow loads. Composed of a tube and 250 colour testers to confirm sterilization.
Single pack

Bowie & Dick Test

Test for Class B autoclaves to evaluate the penetration efficiency in porous loads.
Single pack
Carton of 10 pieces

Prion Test

Test for Class B autoclaves, calibrated with the temperature, considered effective in 134°C Prion sterilization cycles (134°C x 18 minutes). Composed of 200 colour testers.
Single pack

Optional tray holders

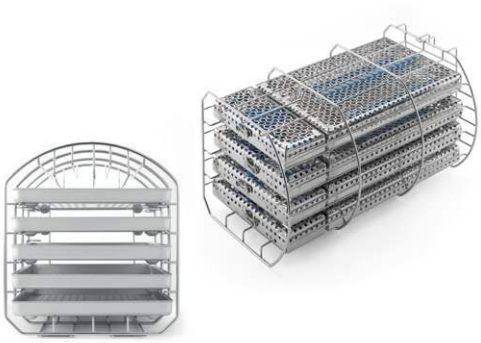

Tray holder for sterilisation cassettes

Rounded steel tray holder designed to hold five standard aluminium trays. If rotated by 90°, it can hold four sterilization cassettes. Capacity: four 1 DIN cassettes + four 1/4 DIN cassettes.

Trays not included

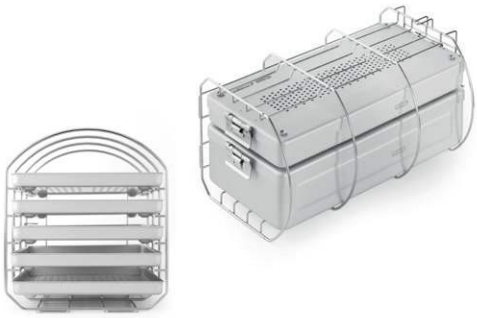

Tray holder for sterilisation container

Rounded steel tray holder designed to hold five standard aluminium trays. If rotated by 90°, it can hold one or more sterilisation containers. Max. capacity: 190 x 152 x 380 mm (wxhxd).

Trays not included

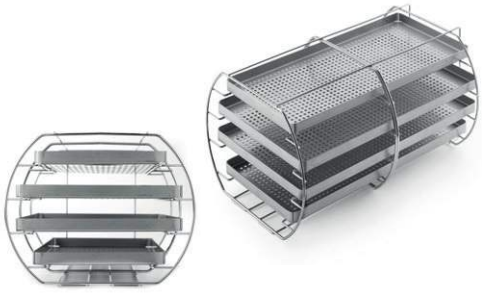

XL tray holder kit

XL rounded steel tray holder, with a capacity of four special aluminium trays.

Trays dimensions (wxhxd):
175 x 17 x 380 mm (upper and lower tray)
220 x 17 x 380 mm (central tray)
Trays included in the kit

Universal support surface

A steel support surface that is suitable for loads with greater dimensions.
It can be installed directly in the boiler, after removing the tray holder provided.

Dimensions (wxhxd):
194 x 53.5 x 350 mm - 24 L
194 x 53.5 x 250 mm - 18 L

Traceability and connectivity

Print Set 1

Built-in thermal paper printer for those who wish to print and store the results of the sterilization cycle on a paper copy. It can be installed on-board in a few simple steps on the front of the machine.

Print Set 2

Built-in adhesive labels printer: safely tag your load. Install this simple printer device on board in a few easy steps. Save space and conveniently print your labels and bar codes.

Print Set 3

External large-quantity labels printer for continuous production. Safely tag your load by connecting the printing device in a few easy steps. Can be used for both labels and bar codes.

E-WiFi

Optional WiFi kit for connecting E10 and E9 autoclaves or Euroseal® Valida thermosealer to a computer, tablet or smartphone. With E-WiFi, all data are always available and updated in the computerized sterilization log. E-Link software, included in the kit, can be easily installed into a Windows or iOS operating system and allows to control up to five Euronda devices equipped with E-WiFi kit.

E-Data & E-Memory software

E-Data software allows to link autoclaves and other Pro System Devices to your network system in order to have all the sterilization data available for your practice management software. E-Data is available for both Windows and iOS operating systems on the market, such as Dios, Segosoft, Julie, Visiodent and Kodak. E-Memory software manages the sterilization data on your computer. Thanks to this file management system you will have a complete and organized database of your sterilization process.

Water treatment systems

Aquaosmo

Aquaosmo is a system that uses reverse osmosis to produce deionized water. A complex filtering system, containing no fewer than four filters and 1 membrane, produces a large amount of water that is suitable for supplying autoclaves and all of the equipment in clinics, in accordance with the EN 13060 standard (<15 µS/cm). A gun for spraying water manually can be also connected. Aquaosmo is designed to be installed together with an Aquabox and connected directly to an autoclave. It can supply up to four autoclaves at the same time if it is fitted with the special external accumulator tank kit, which has a capacity of 12 litres. Aquaosmo does not need to be connected to an electrical power supply and it can be installed directly on a work surface or inside a unit.

It can supply:
4 autoclaves

Water production:
1 litre of water every 20 min.

Supply pressure:
Min. 2 / Max. 3 bars

Conductivity of incoming water:
Max. 650 µS

Dimensions (wxhxd):
360 x 280 x 180 mm

Weight (empty):
5.3 Kg

External accumulation tank
Included in the kit

Aquabox
Included in the kit

Nozzle
Not included in the kit

Aquafilter 1 to 1

Device that produces deionized water for the autoclave, in compliance with the EN 13060 standard (<15 µs/cm). It can be connected to one Euronda autoclave. Aquafilter deionises an average of 1 litre of water per minute. An indicator light shows the water conductivity level, allowing you to see at a glance when it's time to replace the resins. It can be equipped with an automatic shut-off device. It can be positioned on the worktop, inside a cabinet or it can be wall-mounted. The pack contains: two ion-exchange resin cartridges, a resin fixing tool, a water mains connection pipe, and a pipe and cable for connection to an Euronda autoclave.

It can supply:
1 autoclave

Water production:
1 L of water per min.

Dimensions (wxhxd):
390 x 455 x 145 mm

Weight (empty):
8.4 Kg

Aquadist

Water distiller that boils water and condenses the steam to obtain distilled water. It distils 0.7 litres of water per hour. 4 litres capacity. It passes all safety tests, complying with all electromagnetic compatibility standard (2014/30/EU) and low voltage standard (2014/35/EU) requirements.

Water production:
0,7 litre of water per hour

Dimensions (Øxh):
230 x 360 mm

Weight (empty):
3.5 Kg

Aquabox

Aquabox is a device that allows Euronda autoclaves to be connected to an external supply of water that has already been treated. It is ideal for clinics that already have water treatment systems based on osmosis or other methods. It can be installed easily on all Euronda Class B autoclave models. Quality controls on incoming water are guaranteed for devices with conductivity meters.

Dimensions (wxhxd):
100 x 100 x 50 mm

Weight:
0.5 Kg

Sterilisation cycles

	B 134		B 121	
	Solid, porous and hollow, wrapped and unwrapped		Solid, porous and hollow, wrapped and unwrapped. Particularly indicated for plastics, turbines and handpieces	
	18 L	**24 L**	**18 L**	**24 L**
Temperature	134° C	134° C	121° C	121° C
Pressure	2.05 bar	2.05 bar	1.05 bar	1.05 bar
Sterilization time	4'	4'	20'	20'
Drying time	15'	15'	15'	15'
Total time with standard loads	27'	29'	43'	44'
Maximum load solid/porous	4.5 Kg / 1.5 Kg	6 Kg / 2 Kg	4.5 Kg / 1.5 Kg	6 Kg / 2 Kg

Personal functions

(Light** and Light&Stock cycles** can be activated on demand with a password)

	S 134		S 121	
	Sterilization of non-bagged or bagged solid products		Sterilization of non-bagged and plastic or bagged solid products	
	18 L	**24 L**	**18 L**	**24 L**
Temperature	134° C	134° C	121° C	121° C
Pressure	2.05 bar	2.05 bar	1.05 bar	1.05 bar
Sterilization time	4'	4'	20'	20'
Drying time	15'	15'	15'	15'
Total time with standard loads	15'	18'	31'	32'
Maximum load solid	4.5 Kg	6 Kg	4.5 Kg	6 Kg

* Times are intended without drying. The times have a tolerance of +-5%.
** All of the cycles are available unless it is not possible due to specific national legislation.

	B 134 prion		B 134 - rapid		B 134 prion - rapid	
	Prion cycle for wrapped and unwrapped solid, porous and hollow		Rapid cycle for wrapped and unwrapped solid, porous and hollow For 1 tray instruments		Rapid prion cycle for wrapped and unwrapped solid, porous and hollow For 1 tray instruments	
	18 L	**24 L**	**18 L**	**24 L**	**18 L**	**24 L**
	134° C	134° C	134° C	134° C	134° C	134° C
	2.05 bar	2.05 bar	2.05 bar	2.05 bar	2.05 bar	2.05 bar
	18'	18'	3'5''	3'5''	18'	18'
	15'	15'	4'	4'	4'	4'
	41'	43'	24'	27'	40'	42'
	4.5 Kg / 1.5 Kg	6 Kg / 2 Kg	0.6 Kg / 0.2 Kg	0.6 Kg / 0.2 Kg	0.6 Kg / 0.2 Kg	0.6 Kg / 0.2 Kg

	N 134		N 121	
	Unwrapped solid instruments		Sterilization of non-bagged and plastic solid products	
	18 L	**24 L**	**18 L**	**24 L**
	134° C	134° C	121° C	121° C
	2.05 bar	2.05 bar	1.05 bar	1.05 bar
	4'	4'	20'	20'
	4'	4'	4'	4'
	24'	24'	33'	33'
	4.5 Kg	6 Kg	4.5 Kg	6 Kg

Technical data

	E9 - 18 L	E9 - 24 L
Overall dimensions	460 x 455 x 610 mm (wxhxd)	
Weight (machine empty with basket)	45,5 Kg	48 Kg
Power supply	230 V 50 / 60 Hz	
Absorbed current	2300 W	
Operating temperature	+5 - +40°C	
Operating altitude	≤ 2000 m a.m.s.l *	
Minimum depth of the support surface	500 mm	
Minimum width of the support surface	460 mm	
Minimum space above the tank	0 mm leaving the loading cap free	
Noise level	50 dB	
Weight per support area (tank full and chamber with max. load)	45,5 Kg + 7,5 Kg = 53 Kg Load on each foot : 13,3 Kg	48 Kg + 9 Kg = 57 Kg Load on each foot : 14,3 Kg
Operating range	Indoor use - Relative humidity 85% Maximum line-voltage deviation ±10% Installation category II - Pollution level 2	
Water consumption volume	300 ml	
Tank capacity (clean water / used water)	5 litres / 3,3 litres	

* For altitudes higher than 2000m, please contact Euronda SPA

Safety Device

- Overpressure protection
- Accidental door opening protections
- Process appraisal system
- Real-time self diagnostic system

Compliance with harmonised standards

EN 13060
EN 14971
EN 61010-1
EN 61010-2-040
EN 61326
EN 13445

Documentation

- User Manual
- Declaration of conformity chamber
- Declaration of conformity autoclave
- Warranty Certificate
- Installation chart
- Servicing handbook

Certification information

- E9 Autoclave compliant with Directive 93/42/EC and addenda.
- Class II b device
- Chamber compliant with PED Directive 2014/68/EC
- Company certification: ISO 9001, ISO 13485
- CE Type Ref: E9 NEXT 18L – E9 NEXT 24L

Technical Specifications

Overall required space (mm)

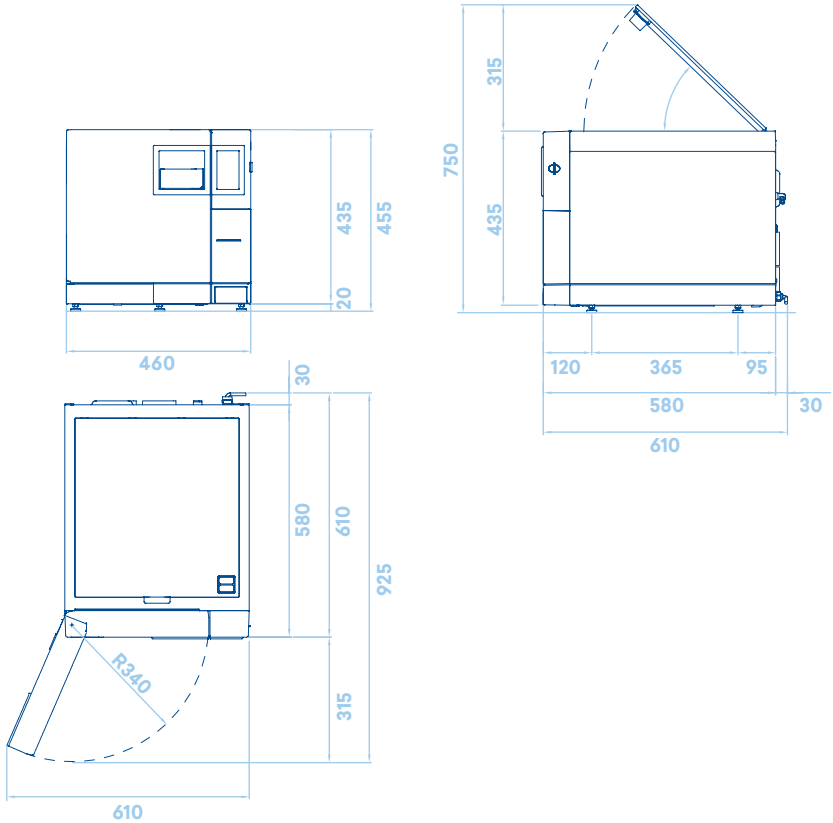

Useful Space (mm)
E9 - 18 L

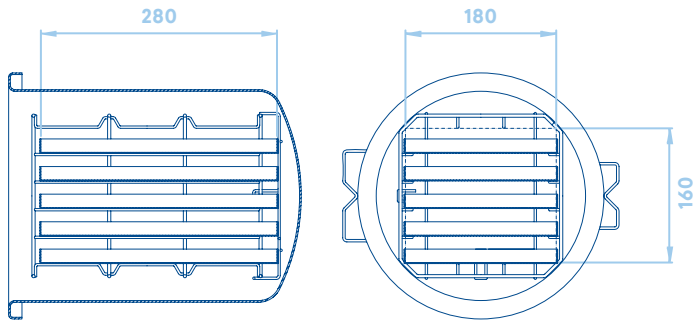

Useful Space (mm)
E9 - 24 L

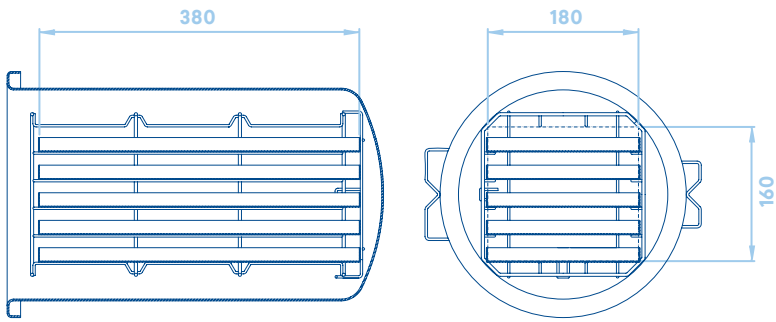

2020© Euronda Spa - credits: www.otium.tv & www.heycom.net

Euronda Spa© 2020

This catalogue
cannot be copied,
scanned or reproduced
by any means.
All rights reserved.

Picture, description,
quoting, dimension
and technical data
have to be considered
as purely indicative.

While maintaining the
basic characteristics
of the product, the
manufacturer reserves
the right to make
modifications at
any time with the sole
aim of improvement.

Euronda Spa

Via Chizzalunga 1
36066 Sandrigo
Vicenza, Italy
t (+39) 0444 656111
f (+39) 0444 656199
m info@euronda.com
www.euronda.com

Deutschland

Euronda Deutschland
Am Landwehrbach 5
48341 Altenberge, Deutschland
t (+49) 2505 9389 0
f (+49) 2505 9389 29
m info@euronda.de
www.euronda.de

France

Euronda France Eurl
ZAC les Vallées, Avenue de Bruxelles
60110 Amblainville, France
t + 33 (0) 3 44 06 69 70
f + 33 (0) 3 44 02 03 89
m info@euronda.fr
www.euronda.fr

España

Euronda - Identyd
Identyd, Calle Músico
Antonio Rodríguez de Hita, 12
Bajo 30007 Murcia
t 900102034
m info@euronda.es
www.euronda.es

Russia

OOO Finstar
5/2a Varshavskaya str.
196128 St. Petersburg, Russia
t + 7 (812) 635 88 94
m info@finstartech.ru
www.euronda.com.ru

990328 - Rev.02 - 03/2020

Euronda®