Thermosealers and medical packaging

EN

The packaging revolution



Euronda®

Pro System

Thermosealers and medical packaging
The packaging revolution

4 **Thermosealers and medical packaging**
The packaging revolution

7 **Euromatic®**
Simplifies, speeds up and keeps track of work

11 **Euroseal® Valida**
The thermosealer that validates the process

15 **Euroseal®**
The sealing revolution at your fingertips

19 **Euroseal® Infinity**
A sealing machine is for forever

22 **Technical data**

24 **Medical packaging**

25 Eurosteril® Sterilization rolls

25 Mix Eurosteril®

26 Eurosteril® Gusseted rolls

26 Euroseal® Check

27 Eurosteril® Sterilization pouches

27 Eurosteril® Self adhesive pouches

Euronda Pro System

Products, Process, Protection



Cleaning

Thermal disinfection

Eurosafe 60

Ultrasonic washing

Eurosonic® 4D
Eurosonic® 3D
Eurosonic® Energy
Eurosonic® Micro

Packing

Thermosealing

Euromatic®
Euroseal® Valida
Euroseal®
Euroseal® Infinity

Sterilization rolls

Euroseal® Check

Euronda Pro System is a Total Protection System for dental practices that has been developed to ensure the safety of staff, patients, instruments and working environments. There are a number of steps in the sterilization process and it will only be successful if each one - from collection to storage - is carried out properly. Thanks to the Pro System line, it is possible to implement a cutting-edge, effective, efficient protocol that can be followed on a regular basis and increase the safety of a practice while optimizing its resources.





Sterilization

Autoclaves

EXL
E10
E9
E8

Tests

Traceability / Retrieving

Water treatment

Aquaosmo
Aquabox
Aquafilter 1 to 1
Aquadist

Thermosealers and medical packaging

The packaging revolution



The purpose of packaging is to keep instruments sterile after the sterilisation process. It involves putting instruments that have been decontaminated, washed, cleansed, disinfected, rinsed, dried, and checked into special pouches. The pouches are then sealed in order to keep the instruments sterile over time (in compliance with UNI EN ISO 11607-1 and UNI EN 868-5). Euronda offers a wide range of packaging solutions and thermosealing machines designed to simplify packaging operations, ensure a perfect seal and protect the sterility of packaged instruments, while avoiding mistakes and delays. Moreover Euroseal® Valida and Euromatic® carry forward the concepts of validation, connectivity and traceability of the Euronda Pro System.



Euromatic®

Simplifies, speeds up and keeps track of work

With a completely revamped design and new functions, Euromatic® is a rotary thermosealing machine with continuous cycle technology. It has a sealing speed of 8 m/min, which makes it ideal for dental practices with a large number of pouches to seal. Simply insert the pouch containing the instruments and Euromatic® automatically drags it until it reaches the end position and then seals and cuts it.



Sealing dimensions:
12.5 mm

Dimensions (lxhxd):
510x215x242 mm

Weight:
14 kg

Power supply:
200-240 V
50/60 Hz

Power consumption:
600 W

Data selected by the operator are printed directly onto the pouch by the built-in printer which features a new system for optimizing print cartridges. Not only does it ensure outstanding results in record time, it allows users to validate the process and keep track of all sealing data, also saving them on a USB device or a SD Card. For perfect, quick, safe and traceable sealing.



Fast

The sealing speed of 8 m/min. combined with multi-band sealing give perfect results in record time.

Simple

The innovative 2.8" colour touch-screen display, featuring a new user-friendly interface, guides the user through the menu options in a clear and rapid manner.

Accessorizable

A complete range of accessories are available to enhance usability, such as the front sliding table made of satin-finished steel complete with a bench-top roll-holder and cutter unit.

Safe

An audible alarm alerts the operator of any matters requiring their attention and the stand-by function automatically activates when the machine is not in use.

Traceability

The built-in printer prints data directly onto the pouches. All data can be transferred to a computer using a USB device, a SD Card and a standard Ethernet cable.

Adjustable

The temperature can be adjusted from the control panel to ensure the perfect seal with any type of paper.

Optional accessories



Front sliding table.
Dim. 480 x 60 x 240 mm (lxhxd)



Front sliding table with rollers.
Dim. (lxhxd): 790 x 66 x 289 mm



Bench-top roll-holder
and cutter unit.
Dim. (lxhxd): 480 x 78 x 300 mm

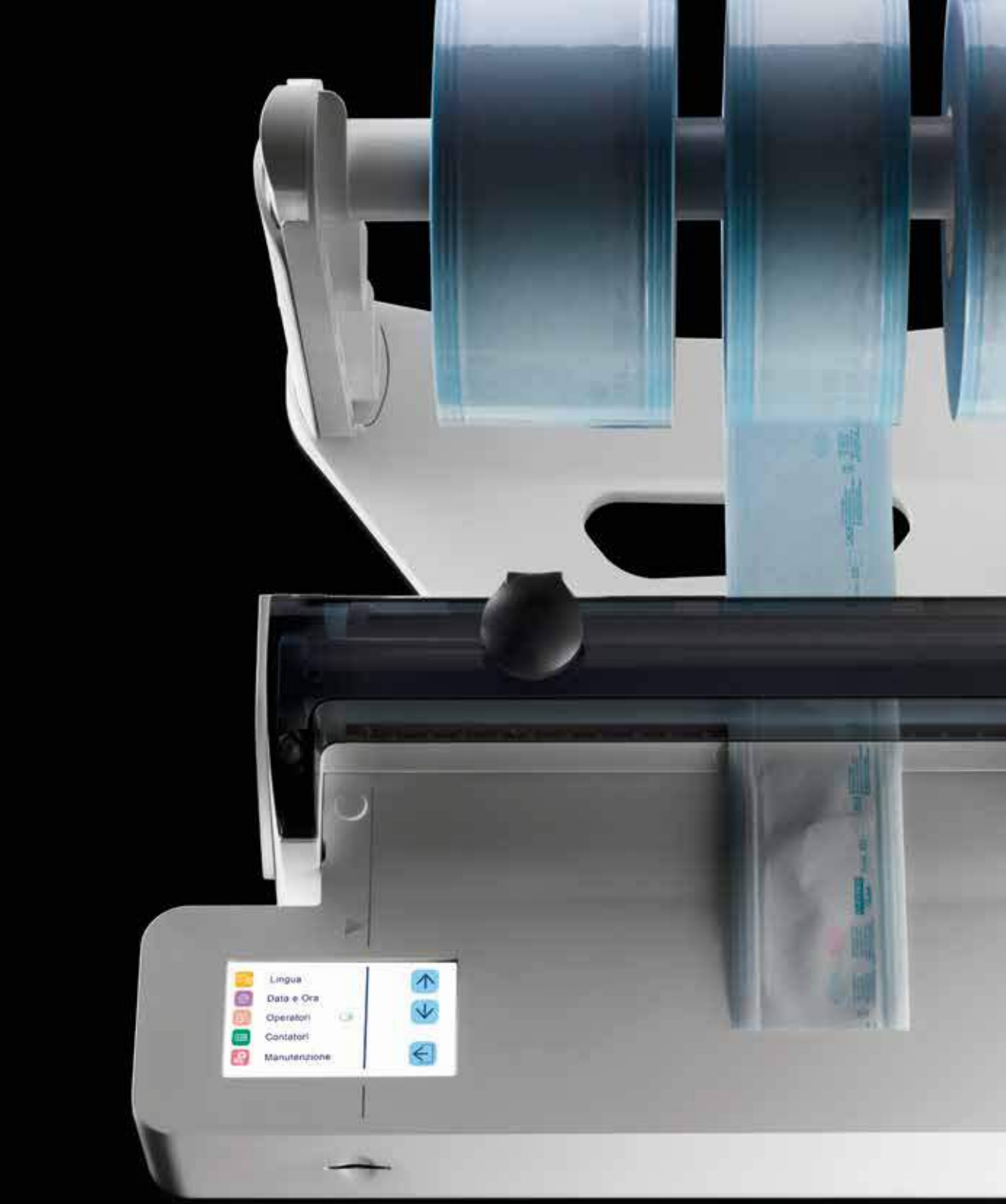
Lingua
Data e Ora
Operatori
Contatori
Manutenzione

Euroseal® Valida

The thermosealer that validates the process

The Euroseal® Valida thermosealers comes with all of the best features of a manual sealing machine: it has an innovative and ergonomic design, it is sturdy, safe, and versatile thanks to its patented roll holder, and it is extremely easy to use thanks to the handy support surface and the transparent polycarbonate cover. Moreover, Euroseal® Valida can validate the sealing cycles and save data concerning the cycle and results on a SD card. Sealing data can be transferred directly to a computer using



Sealing dimensions:
12x310 mm

Dimensions (lxhxd):
500x315x490 mm
→ technical data page 22

Weight:
8.3 kg

Power supply:
200-240 V
50/60 Hz

Power consumption:
100 W

Ethernet and WiFi (optional) connections. The 4" touch-screen display has a new user-friendly interface thanks to the upgraded software. Inserted directly on the support surface, users can quickly and intuitively browse through the menu and select one of the preset cycles or a free cycle, which allows users to adjust the sealing temperature to seal rolls and pouches of all kinds.



Traceability

The sealing data can be transferred directly to a computer via Ethernet and WiFi (optional) connections.

Validation

It validates the sealing cycle, confirming the successful outcome and saves the associated data (time, temperature and pressure) on an SD card.

Versatile

The patented roll holder can be wall-mounted making the machine extremely adaptable to the space available.

Safe

It minimizes the risk of errors and accidents, in full compliance with EN 17665-1, EN 11607-2 and EN 868-5.

Handy

It has a handy support surface and a polycarbonate cover that allows the roll to be monitored all of the way to the sealing area; the LAN port has been repositioned for improved ergonomics.

User-friendly

Users can choose between preset cycles and a free cycle to set the temperature as desired.



New 4" colour touch-screen display.



Improved position of Ethernet port.

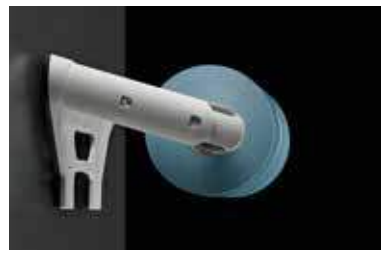

Roll holders can be wall mounted to optimise space.

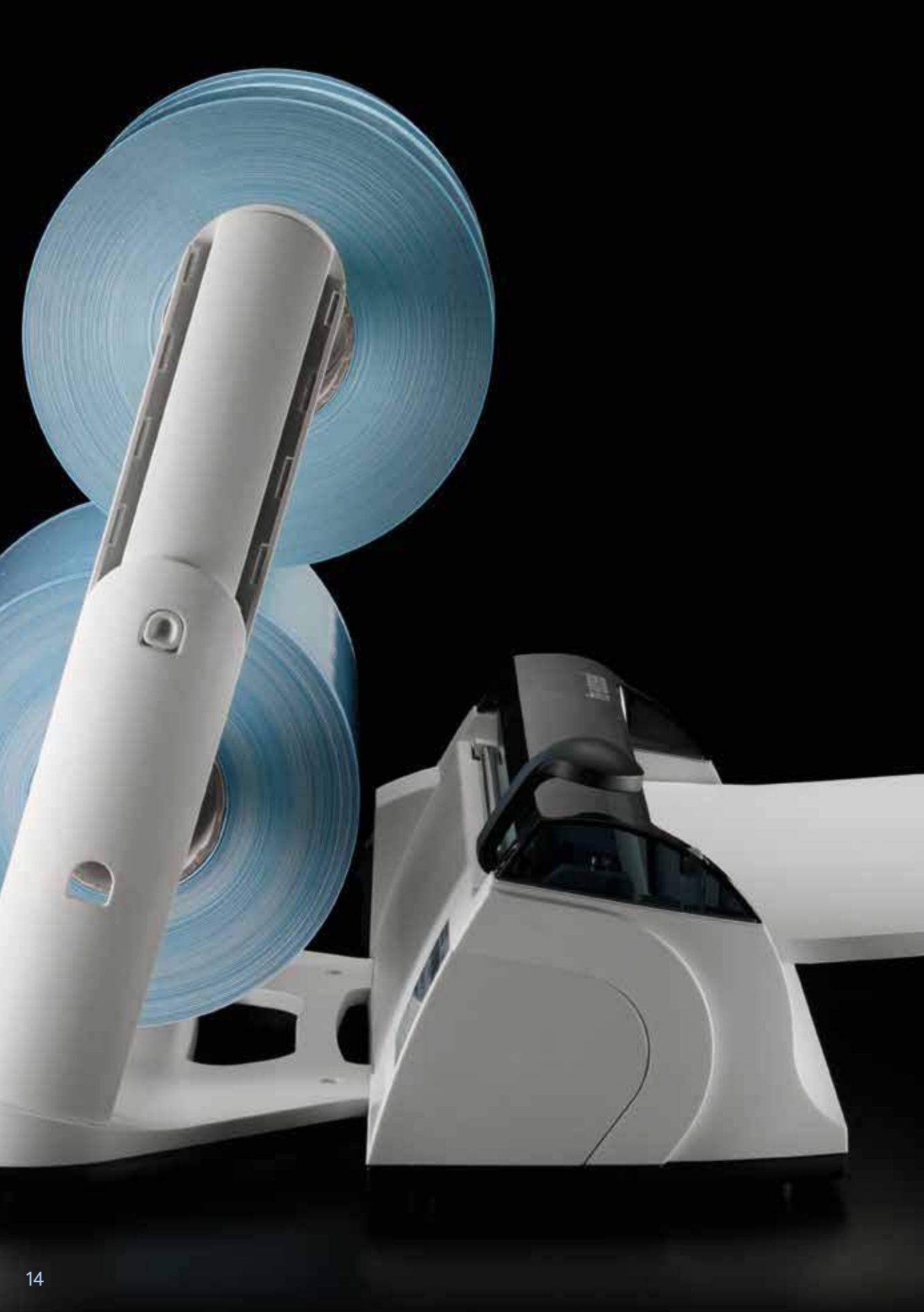

Euroseal®

The sealing revolution at your fingertips

The Euroseal® thermosealing machine is attractive, compact, ergonomic and easy to use. The see-through polycarbonate cover allows operators to perform sealing operations with greater precision. The special patented roll holder is adjustable in height and depth and can be wall-mounted in order to meet the specific needs of each dental practice.



Sealing dimensions:
12x310 mm

Dimensions (lxhxd):
456x315x390 mm
→ technical data page 22

Weight:
7.1 kg

Power supply:
200-240 V
50/60 Hz

Power consumption:
100 W

The integrated support surface aids the sealing process and provides more practical working conditions.
Anti roll-back blocking system. Safety system to prevent the roll from burning. Audible and visual warnings signals during use. Fully compliant with UNI EN 868-5 and EN ISO 11607-2.



Versatile

Patented roll holder is adjustable and can be wall-mounted.

Simple

Polycarbonate cover to visually monitor the roll until it is under the sealing area.

Handy

The spacious support surface makes work practical, comfortable and easy.

Sturdy

Lightweight and cutting-edge materials, built to withstand heavy usage.

Safe

Anti roll-back blocking and scald prevention system, combined with sound and light signals.

Ergonomic

Every detail is designed to increase the quality of the operator's work.



Handy support surface makes work faster and easier.

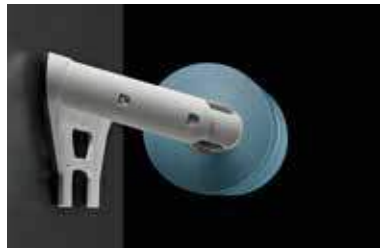

Roll holders can be wall mounted to optimise space.


Euronda
Pro System

Euroseal® Infinity

A sealing machine is forever

An electronic thermosealing machine for continuous cycle processing at a constant temperature: Euroseal® Infinity is the natural successor to Euroseal® 2001 Plus, from which it has taken and built upon its key elements. Robust, reliable and easy to use, the new design is both eye-catching and functional. The new built-in cutter and sealing lever positioned at the front not only improve ergonomics and safety but also make packaging and sealing operations easier.

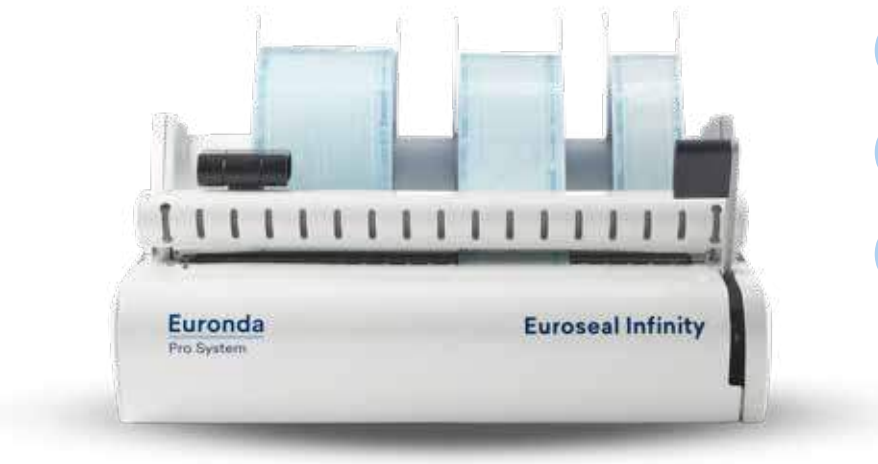

Sealing dimensions:
12x310 mm

Dimensions (lxhxd):
430x215x382 mm

Weight:
7.1 kg

Power supply:
200-240 V
50/60 Hz

Power consumption:
100 W

This design makes the machine more compact so it can be comfortably placed on a table top or wall-mounted in a vertical position. Euroseal® Infinity has a metal bar that holds and locks the roll and ensures that it remains inside the sealing area. The smooth surfaces make it easy to clean. Fully compliant with UNI EN 868-5 and EN 11607-2.



Ergonomic

The built-in cutter and sealing lever at the front of the machine make packaging operations easier.

Compact

The compact size allows it to be placed on a work surface, flush-mounted or vertically fixed to a wall.

Reliable

It is extremely easy to use and limits the possibility of making mistakes.

Safe

The roll-locking bar keeps the roll stationary inside the sealing area at all times.

Sturdy

The high-quality materials and solid design make it virtually indestructible.

Adaptable

The roll holder can be placed in two positions: high for best performance when the machine is wall-mounted, or low to speed up roll selection and changing operations.



New built-in cutter, efficient and easy to replace.

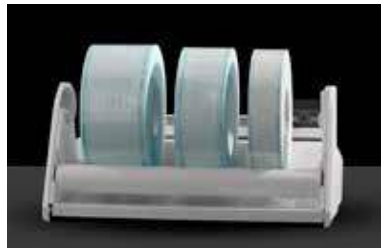

Alternative roll holder solution makes selection and changing operations easy.

Technical data

Euromatic®

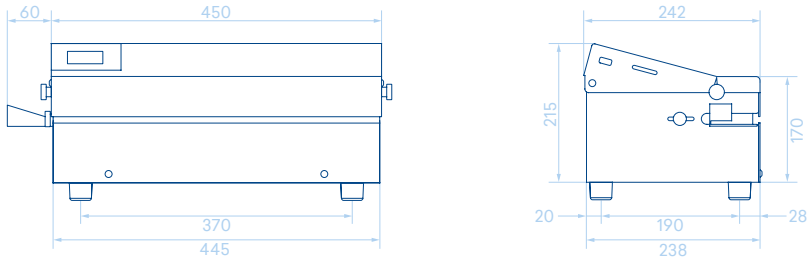

Dimensions: (lxhxd)	510x215x242 mm	**Sealing dimensions**	12.5 mm
		Sealing temperature	160-220°C
		Power supply	200-240V; 50/60 Hz
		Power consumption	600 W
Weight	14 kg	**Display**	2,8" colour touch-screen

Euroseal® Valida

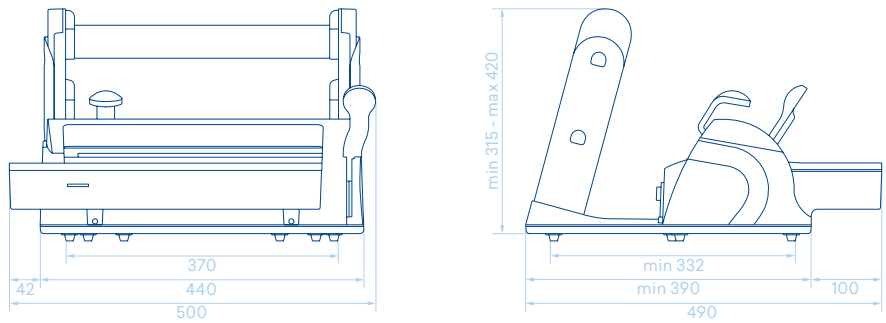

Dimensions: (lxhxd)	standard: 500x315x490 mm With double roll holder: 500x420x490 mm With wall-mounted roll holder:500x200x490 mm	**Sealing dimensions**	12x310 mm
		Sealing temperature	170-190°C
		Power supply	200-240 V; 50/60 Hz
		Power consumption	100 W
Weight	8.3 kg	**Display**	4" colour touch-screen

Sealing conformity

— UNI EN 868-5
— EN ISO 11607-2

Certifications

— Company:
ISO13485
ISO 9001

Standards
Euromatic®

— Machinery Directive 2006/42/CE
Applied standards: EN ISO 12100, EN ISO 13857 EN 60204-1
— Directive 2014/30/EU
Applied standards: EN61326
— Low Voltage Directive 2014/35/EU
Applied standards: EN 61010-1

Conformity with norms and reference standards
Euroseal® Valida, Euroseal® and Euroseal® Infinity

— Directive 2014/30/EU
Applied standards: EN 61326
— Low Voltage Directive 2014/35/EU
Applied standards: EN 61010-1

Euroseal®

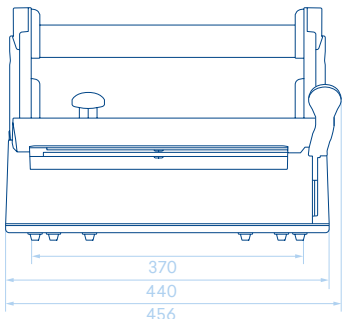

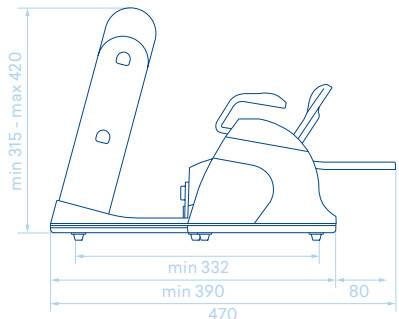

Dimensions: (lxhxd)	standard: 456x315x390 mm With wall-mounted roll holder: 456x200x390 mm With double roll holder: 456x420x300 mm	**Weight**	7.1 kg
		Sealing dimensions	12x310 mm
		Sealing temperature	170-200°C
		Power supply	200–240 V; 50/60 H
		Power consumption	100 W

Euroseal® Infinity

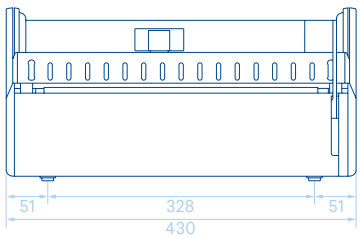

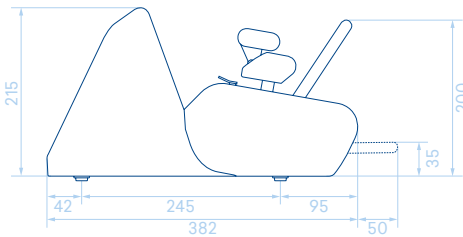

Dimensions: (lxhxd)	430x215x430 mm	**Weight**	7.1 kg
		Sealing dimensions	12x310 mm
		Sealing temperature	170-200°C
		Power supply	200–240 V; 50/60 Hz
		Power consumption	100 W

Medical packaging



Eurosteril® Sterilization Rolls



Eurosteril® sterilization rolls are made of the best certified materials: heavy weight medical paper (60 g/m²) and a double layer of light blue polyester/ polypropylene film. This gives them a guaranteed seal during sterilization, makes them extremely easy to open without releasing fibres or tearing, and offers maximum microbial protection. If stored properly, they can be sterile for up to 6 months.
In addition, the chemical colour indicators signal a successfully completed cycle in the autoclave, thus guaranteeing maximum safety for patients.
Eurosteril® sterilization rolls are manufactured in full compliance with Directive 93/42/EEC (as amended by Directive 2007/47/EC) and the EN 868-5 standard.

CE Type Ref : EUROSTERIL® ROTOLI PER STERILIZZAZIONE, STERILIZATION ROLLS, STERILISATIONS ROLLEN

Classification:
Medical Device Class I

Packaging:
5 cm x 200 m
Carton of 8 rolls
7.5 cm x 200 m
Carton of 5 rolls
10 cm x 200 m
Carton of 4 rolls
15 cm x 200 m
Carton of 2 rolls
20 cm x 200 m
Carton of 2 rolls
25 cm x 200 m
Carton of 1 roll
30 cm x 200 m
Carton of 1 roll
40 cm x 200 m
Carton of 1 roll

Mix Eurosteril®

Practical Mix of rolls made of medical high weight paper (60g/m²) and double layer film of polyester/ polypropylene, maintaining the durability of the instrument's sterility up to 6 months.

Mix composed by:
2 rolls of 5 cm
2 rolls of 7.5 cm
1 roll of 10 cm

Packaging:
Carton of 1 mix

Eurosteril® Gusseted rolls



Gusseted rolls made of medical high weight paper (60g/m²) and double layer film of polyester/ polypropylene, maintaining the durability of the instrument's sterility up to 6 months.

CE Type Ref : EUROSTERIL® ROTOLI PER STERILIZZAZIONE, STERILIZATION ROLLS, STERILISATIONS ROLLEN

Classification:
Medical Device Class I

Packaging:
20 cm x 5 x 100 m (gusseted)
Carton of 2 rolls
25 cm x 5 x 100 m (gusseted)
Carton of 1 roll
25 cm x 6,5 x 100 m (gusseted)
Carton of 1 roll

Euroseal® Check



Tests for checking the safety of sealing bar-based thermosealing machines that comply with the relevant standards.

Packaging:
Box of 100 tests
Carton of 40 boxes

Eurosteril® Sterilization pouches



Thermal-welding standard sterilization pouches made of heavy weight (60 g/m^2) white medical paper coupled with a light blue polyester/polypropylene layer. Three sided weldings with impermeable and uniform canals for the highest microbe protection. The changing chemical colour indicators verify the sterilization process by steam or EtO gas (ethylene oxide). Appropriate peeling without the release of paper fibres or laceration of the film at the moment of opening the packaging.

CE Type Ref : EUROSTERIL® BUSTE PER STERILIZZAZIONE, STERILIZATION POUCHES, STERILISATIONS BEUTEL

Classification:
Medical Device Class I

Packaging:
5 x 25 cm
Box of 500 pieces
7,5 x 25 cm
Box of 500 pieces
10 x 25 cm
Box of 500 pieces

Eurosteril® Self adhesive sterilization pouches



Self adhesive sterilization pouches made of heavy weight (60 g/m^2) white medical paper coupled with a light blue polyester/polypropylene layer. Three sided weldings with impermeable and uniform canals for the highest microbe protection. Adhesive band closure of synthetic rubber. The changing chemical colour indicators verify the sterilization process by steam or EtO gas (ethylene oxide). Appropriate peeling without the release of paper fibres or laceration of the film at the moment of opening the packaging.

CE Type Ref : EUROSTERIL® BUSTE PER STERILIZZAZIONE AUTOSIGILLANTI, SELF ADHESIVE STERILIZATION POUCHES, STERILISATIONSBEUTEL SELBSTKLEBEND

Classification:
Medical Device Class I

Packaging:
9 x 25 cm
Box of 200 pieces
Carton of 9 boxes
14 x 26 cm
Box of 200 pieces
Carton of 6 boxes
19 x 33 cm
Box of 200 pieces
Carton of 5 boxes

2019® **Euronda Spa** - credits: www.otium.tv & www.superagency.net

Euronda Spa © 2019

This catalogue
cannot be copied,
scanned or reproduced
by any means.
All rights reserved.

Picture, description,
quoting, dimension
and technical data
have to be considered
as purely indicative.

While maintaining the
basic characteristics
of the product, the
manufacturer reserves
the right to make
modifications at
any time with the sole
aim of improvement.

990297 - Rev. 02/2019

Euronda Spa

Via Chizzalunga 1
36066 Sandrigo
Vicenza, Italy
t (+39) 0444 656111
f (+39) 0444 656199
m info@euronda.com
www.euronda.com

Deutschland

Euronda Deutschland GMBH
Am Landwehrbach 5
48341 Altenberge, Deutschland
t (+49) 2505 9389 0
f (+49) 2505 9389 29
m info@euronda.de
www.euronda.de

France

Euronda France Eurl
ZAC les Vallées, Avenue de Bruxelles
60110 Amblainville, France
t + 33 (0) 3 44 06 69 70
f + 33 (0) 3 44 02 03 89
m info@euronda.fr
www.euronda.fr

España

Euronda Spa
Identyd, Av. Cabezo de Torres 4
30007 Murcia, España
t 900102034
m info@euronda.es
www.euronda.es

Russia

OOO Finstar
5/2a Varshavskaya str.
196128 St. Petersburg, Russia
t + 7 (812) 635 88 94
m info@finstartech.ru
www.euronda.com.ru

Euronda®