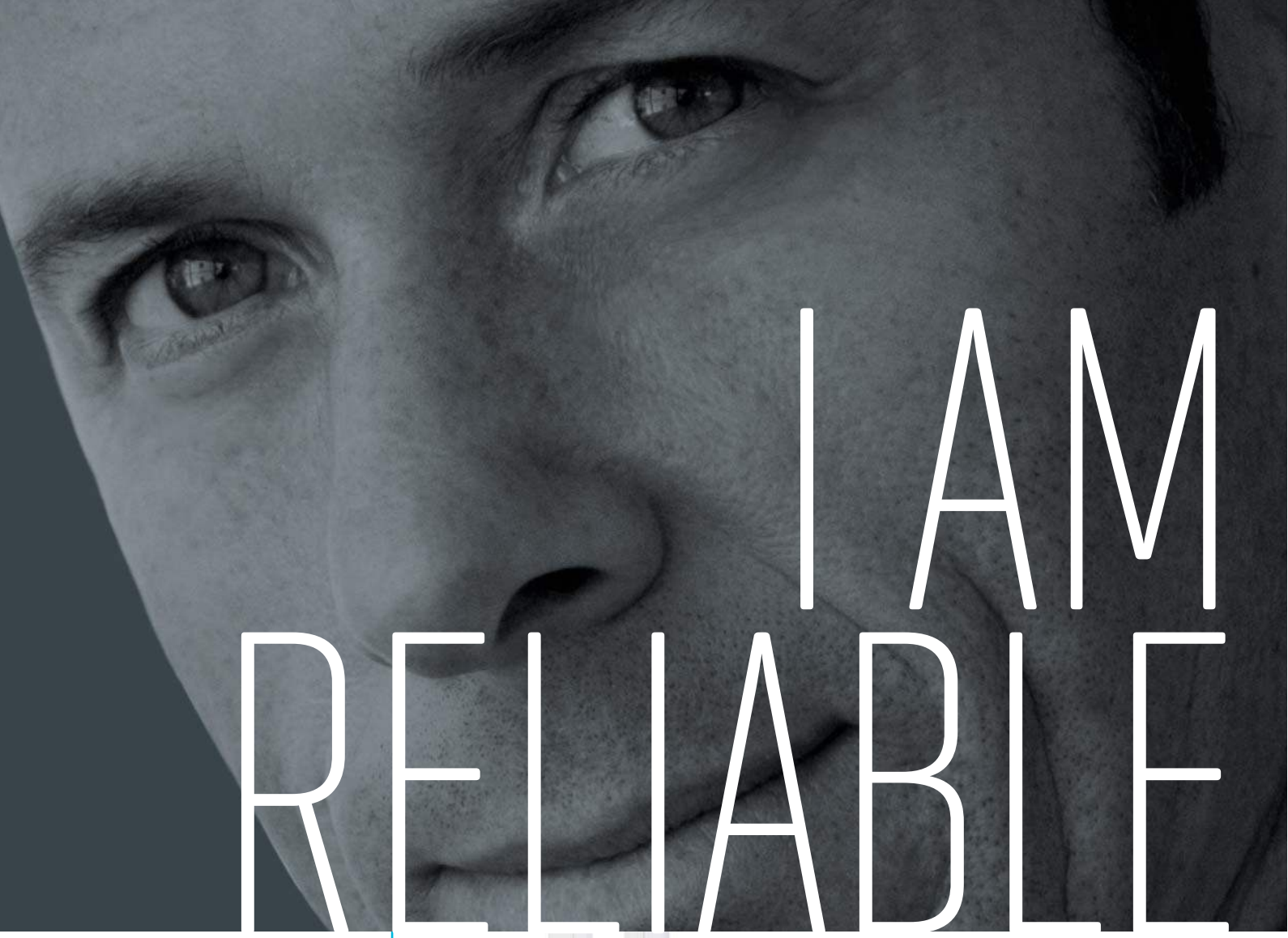

I AM RELIABLE



XMIND

The easy and smart intraoral X-ray system for high quality requirements

EN

ACTEON

PRECISE & EFFICIENT IMAGING

RELIABLE, CONSISTENT QUALITY, AND LONG LASTING HIGH PERFORMANCE

With the X-mind® DC intraoral X-ray system, safe exposure levels and high quality images are guaranteed! Operating at **high frequency, it facilitates the emission of very high quality radiation** whenever it is used. This is made by the “double chamber” where the tube and the electronic components are separated. The control software automatically compensates for variations in main voltages and **the radiation emitted is always of the highest quality** to provide pictures with reproducible parameters.

CLINICAL CASE WITH DIGITAL SENSORS*

1. INITIAL SITUATION

Secondary caries on 46



2. ROOT CANAL TREATMENT

File inside the tooth



Filling with gutta-percha



** Images from SOPIX Series sensors - ACTEON*

NATURALLY PROTECTIVE

CONTROLLED DOSAGE FOR MAXIMUM PROTECTION!

The exposure time control pre-set by the microprocessor ensures a controlled dose for a better protection of you and your collaborators. Exposure times are reduced with the use of digital intraoral X-ray systems.



FLEXIBLE & SECURE EQUIPMENT

USER FRIENDLY

WORK MORE EFFICIENTLY WITH THE EASY TO USE INTRAORAL X-RAY SYSTEM

Improve your workflow with clearly organized **dedicated pre-programming keys**. With the push of a button, you control:

- The parameters: 60 or 70 kV and 4 or 8 mA
- The types of sensors: traditional film or digital.
- The patient morphology
- The exposure time according to the type of tooth

The exposure times can be **customized and programmed** to adapt to your clinical needs.



2 HEADS, 1 TIMER!

With 1 timer, you can control two AC or DC X-Mind model with their specific commands options.

(Technology patented by ACTEON.)

EASILY POSITIONABLE

The X-Mind range is extremely easy to handle, providing **exceptional flexibility** of use and **accurate positioning.**

Smooth movements streamline your workflow!



THE HIGHEST STANDARD OF HYGIENE

X-Mind intraoral X-ray systems are **easy to keep clean** and can be desinfected in compliance with the strictest demands of asepsis in dental practice

ADAPTABLE CONFIGURATIONS FOR EVE RY REQUIREMENT

FLEXIBLE INSTALLATION ALTERNATIVES FOR YOUR PRACTICE

The X-Mind® generators can accomodate any operatory configuration.
3 arms lengths are available : 41 cm (16.2”), 82.5 cm (32.5”) and 110 cm (43.5”) and can be:

- Top wall mounted
- Bottom wall mounted

Dental unit, ceiling and mobile version are also available.

With its adaptable wall plate, it is easy to replace an older generator with the X-Mind® whitout having to do additional drilling on the wall.



Bottom mounted



Top mounted

CHOOSE FROM A VARIETY OF CONES TO BETTER FIT TO YOUR CLINICAL NEEDS



Mobile Version



Long cone (31 cm - 12”)
Recommended for the parllel technique



Short cone (20 cm - 8 “)
Recommended for bisector technique



Rectangular Long cone (31 cm - 12 “)
Reduces the X-rays applied to the patient’s skin by 50%.

TECHNICAL SPECIFICATIONS

	X MIND AC	X MIND DC
Classification	Electromedical equipment, Class 1 type B	
Supply voltage	115/220/230 V - monophase 50/60Hz	115/230 V - 50/60Hz
Power absorption at 230 V	0.8 kVA	1.4 kVA
X-ray tube	New Toshiba DG 073B	New Toshiba DG 073B
X-ray tube voltage	70 kV	60-70 kV
Anode current	8 mA	4-8mA
Focal spot	0.7 mm	
Total filtration	Equivalent to 2 mm Al at 70 kV	
Leakage radiation	< 0.25 mGy/h	
Technology	AC	DC
Timer	from 0.08 to 3.2 seconds	from 0.02 to 3.2 seconds
Weight of the head	9 kg	5.5 kg
Total weight	28 kg	25 kg

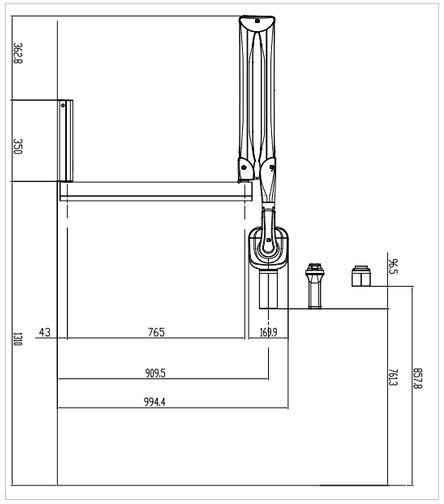

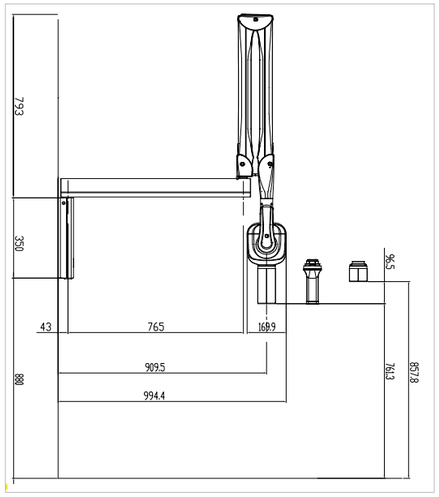

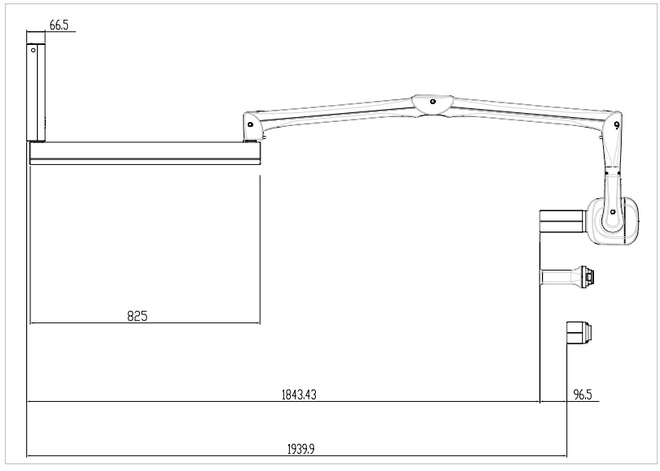





Cones

- Circular Long cone ø 60 mm ..... 31 cm (12")
- Circular short cone ø 60 mm ..... 20 cm (8")
- Rectangular Long cone 45 x 36 mm ..... 31 cm (12")

Arms

- Wall mounting arms ..... 41 cm or 82.5 cm or 110 cm
- Ceiling arm ..... Faro Ø 35 mm – length 170 cm or 130 cm
- Unit arm ..... Ref. Faro Ø 60 mm or Ø 50 mm
- Mobile ..... Height 110 cm, length 80cm, width 70 cm

Accessories

- Second control button with remote exposure switch
- RX indicator light for external use
- Adaptable mounting wall plate

The medical devices X-Mind AC/ DC is of class IIb and manufactured by DE GOTZEN, notified body EUROFINS ITALY - CE 0477. These medical devices are not refunded by health insurance organizations. Read carefully the instructions on the labelling before use. Manufactured in compliance with currently applicable regulations and standards (EC Directive 93/ 42/ EEC and sub-segment amendment). IEC 60601-2-65 imposes for each X-ray generator furnished with a digital sensor to use a square cone. X-Mind® is registered trademarks of DE GÖTZEN.

ACTEON

INNOVATIVE IMAGING

Digital medical imaging has significantly contributed to the improvement of diagnoses and the widespread use of less invasive procedures. Over the past 15 years, ACTEON® has committed to channeling its efforts into contributing to improve the accuracy of surgical procedures, and to reduce the radiation doses emitted. Through the development of ever more sophisticated yet intuitive 2.0 software packages, our R&D teams are able to innovate on a daily basis. In our permanent pursuit of excellence, we are proud today to present our latest innovations in this brochure.

Non contractual document - Ref. 7071114 B - 03/2018 - Copyright © 2018 ACTEON IMAGING. All rights reserved. No information or any part of this document may be reproduced or transmitted in any form without the prior permission of ACTEON IMAGING.

RCS Paris B 337 934 483 - 012573-00b

www.acteongroup.com

For more information, please contact:
SOPRO S.A. | A company of ACTEON Group
ZAC Athélia IV | Avenue des Genévriers | 13705 LA CIOTAT cedex | FRANCE
Tél + 33 (0) 442 98 01 01 | Fax + 33 (0) 442 71 76 90
E-mail : info@sopro.acteongroup.com | www.acteongroup.com