

Clair
Owner´s Manual

D-TEC
LIGHTING SYSTEMS

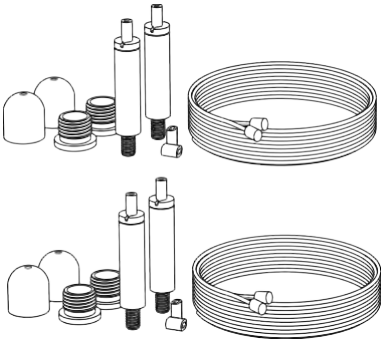





Note: Don´t use sharp objects when unpacking the luminaire!

1. Unpacking Your Clair

Carefully open the packaging without using any sharp objects!

In the packaging you will find the following items:

- Wire arrangements for attaching the luminaire to the ceiling. (4 pcs)
- The Clair Luminaire
- Remote Control Unit and holder

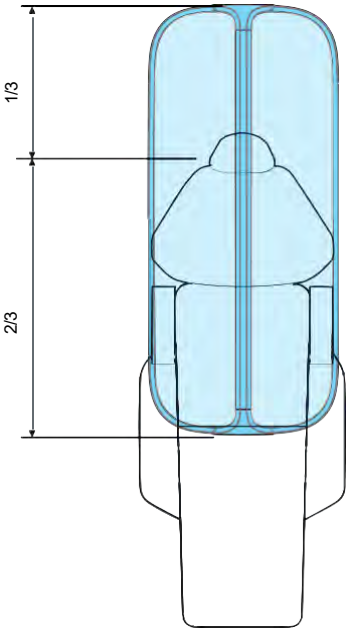

Parallell position. The eyes of the patientshould be in line with 1/3rd of the luminaire.

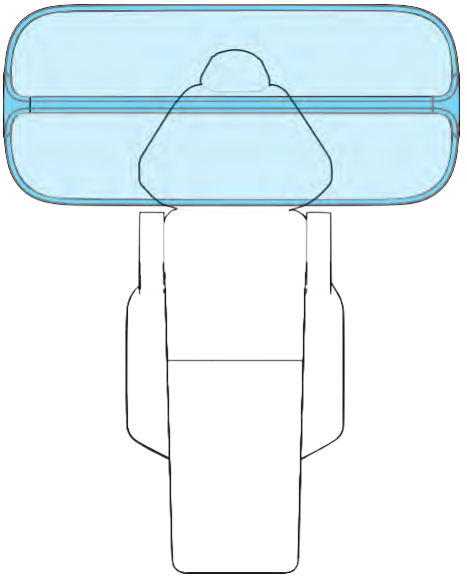

Crosswise position.

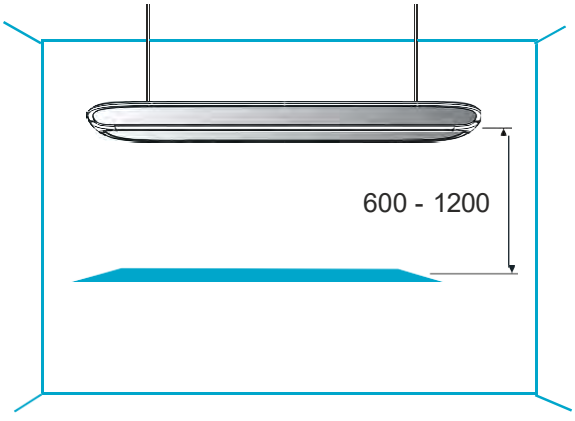

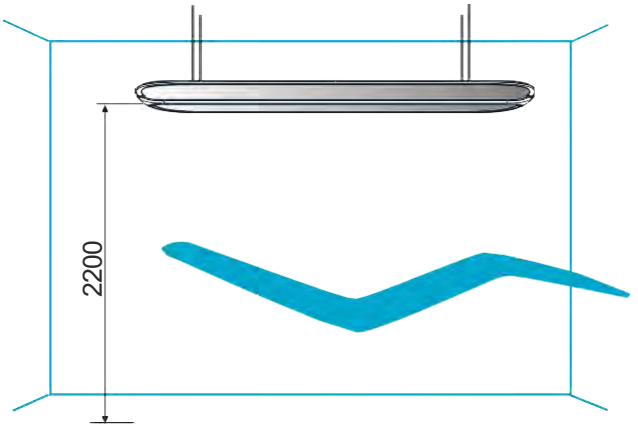

2. Positioning Your Clair

The height of the luminaire should be about 600 - 800mm above the working area.

D-TEC
LIGHTING SYSTEMS

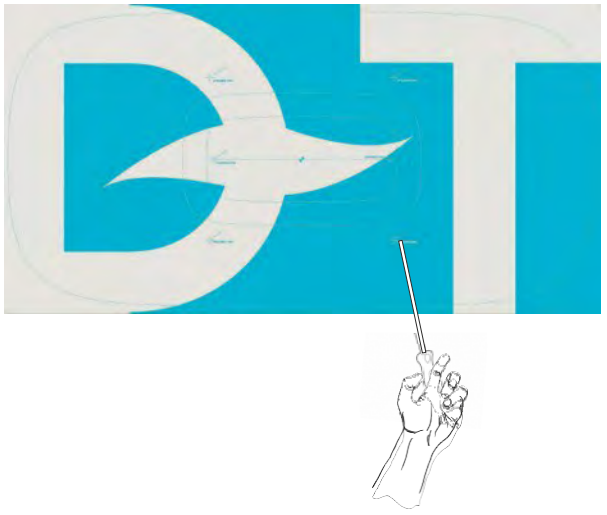

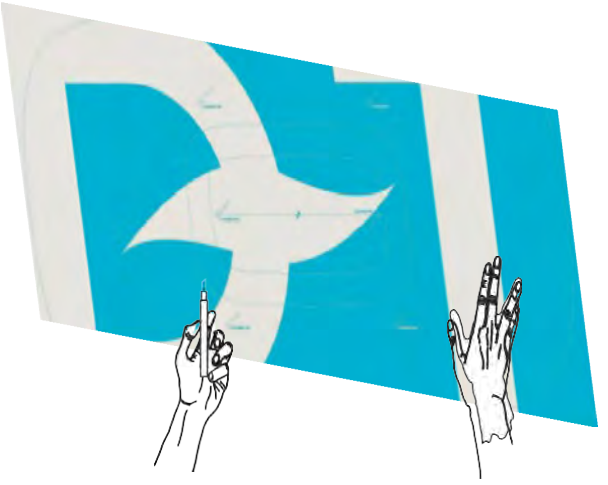

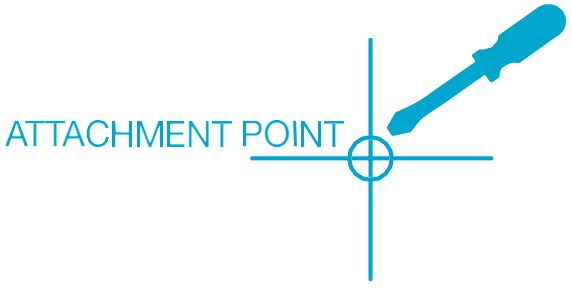

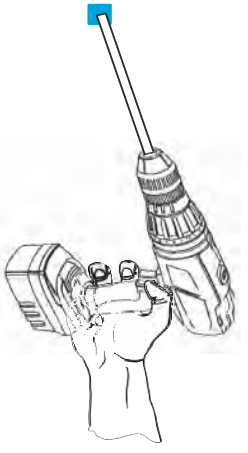

3. Preparing the mounting of Your Clair

AFTER unpacking the luminaire you can use the packaging as a guidefor marking the attachment points in the ceiling.

• Use the front part of the packaging and punch holes with a screw-driver or similar.

• Position the cardboard lid where you want to mount the luminaire,mark out the ceiling points and drill your holes for the attachment.

D-TEC
LIGHTING SYSTEMS

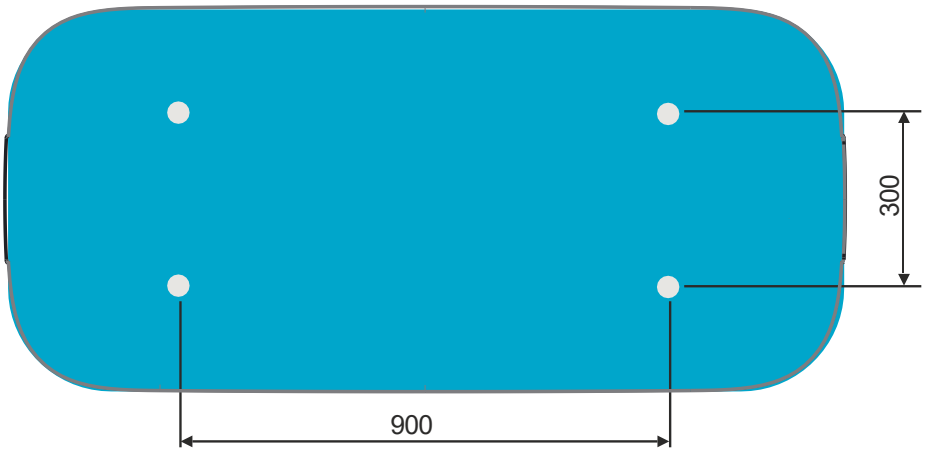

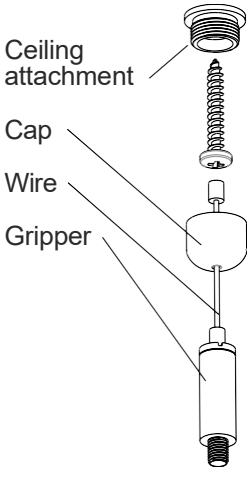

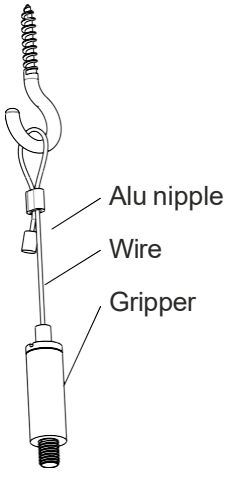

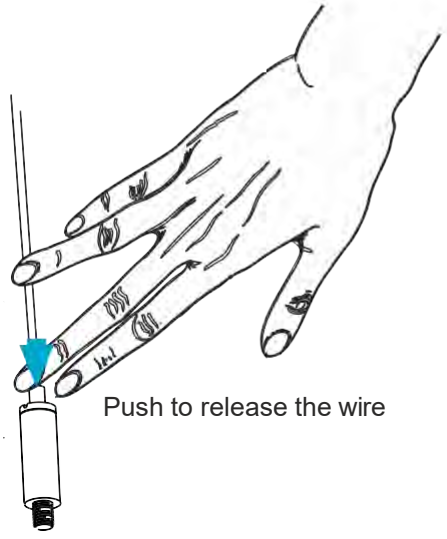

4. Mounting Your Clair in the ceiling

These items for mounting are provided with the luminaire.

Use the one suitable for your needs.

D-TEC LIGHTING SYSTEMS

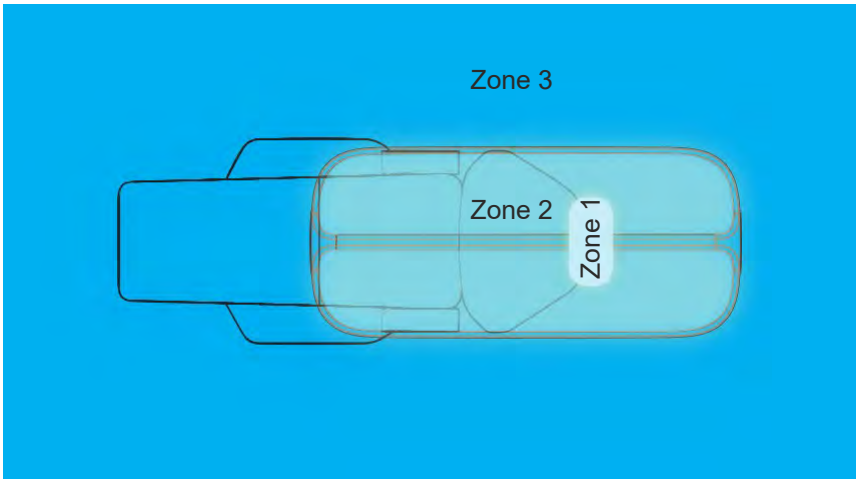

5. Light conditions for surgery

Image of preferred light conditions for operation rooms.

- Zone 1 = 20 000 - 30 000 LUX
- Zone 2 = 3000 - 5000 LUX
- Zone 3 = 500 - 1000 LUX

Caution!

Fade out the lamp when working with light/curing materials.

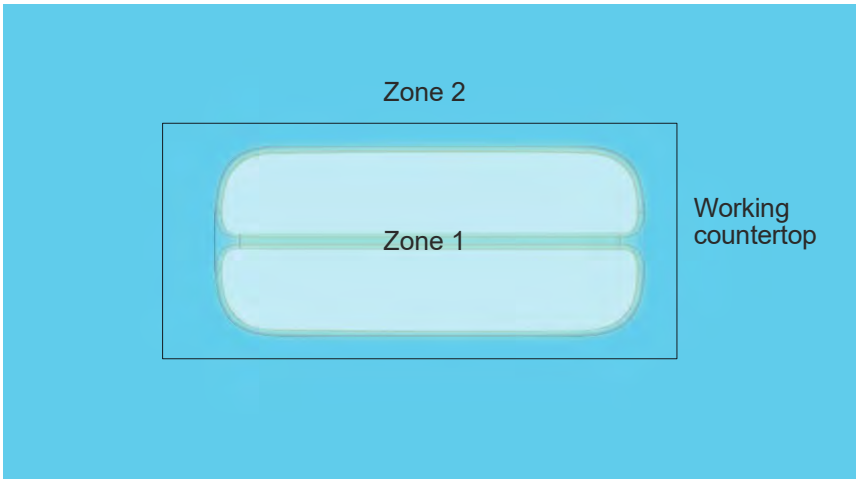

6. Light conditions for examination

Image of preferred light conditions for examination rooms.

- Zone 1 = 3000 - 5000 LUX
- Zone 2 = 500 - 1000 LUX

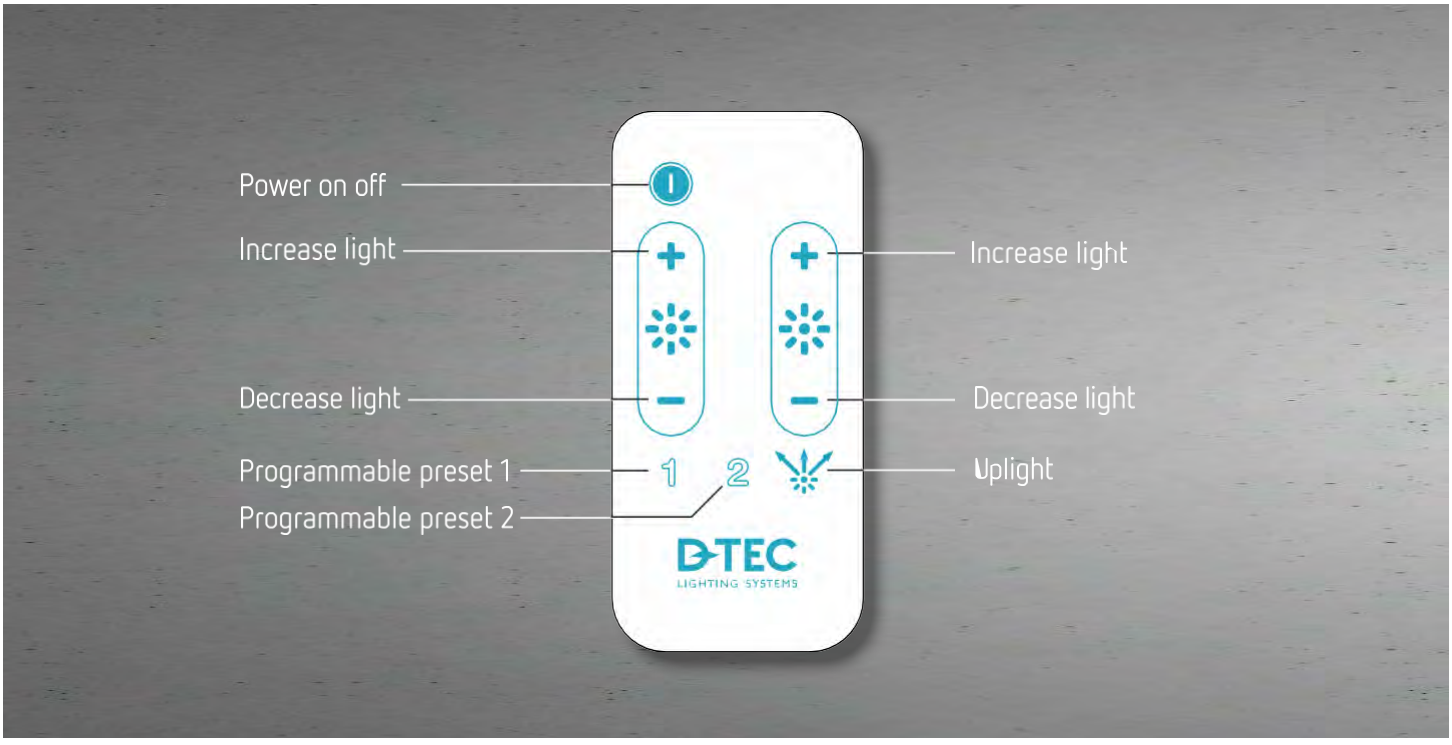

7. Operating Your Clair with the remote control unit

Clair comes with a remote control for all functions, delivered with a wall mounted holder. When working with light curing materials (composite), it can be an advantage to decrease the daylight preventing the material to cure too fast. Lowering the daylight in Clair will also make it easier to examine x-rays. The luminaire has two factory-stored presets. You can modify these presets at any time: Set the desired light mix with the +/- buttons and button, 3 for uplight. Hold buttons 1 or 2 for about 3 seconds. The sun symbol on the luminaire flickers to indicate that the new program has been stored.

As an option Clair comes with Dynamic daylight. Dynamic daylight is a function that changes the color temperature of Clair between approx 4000-6000K automatically over time. By doing this, Clair can mimic some of the differences in light temperature that occurs in nature. Even though the changes are very subtle, the differences in color temperature can stimulate your senses in a similar way that the natural variations in daylight does outdoors.

To activate Dynamic daylight, hold the uplight button for 3 seconds. As confirmation the led indicator on the luminaire will flicker and then start glowing with a yellow pulsating light.

To deactivate, hold the uplight button 3 seconds again.

D-TEC
LIGHTING SYSTEMS

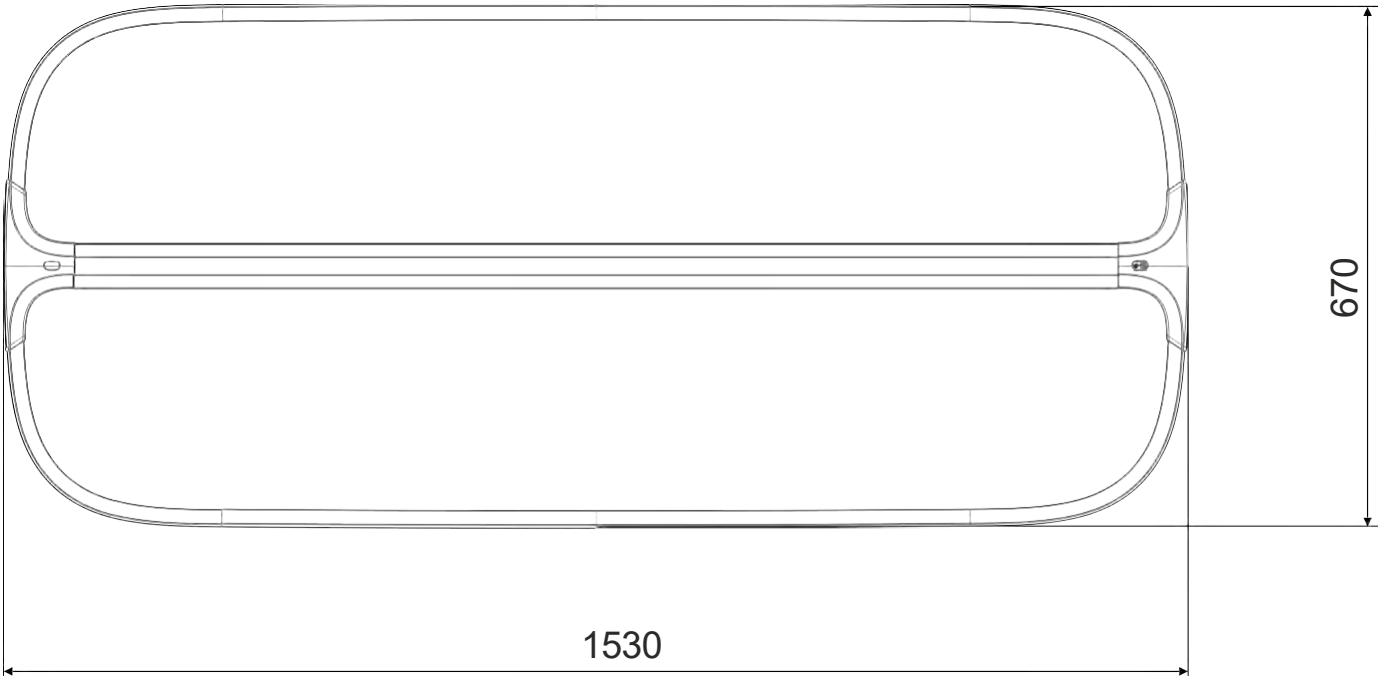

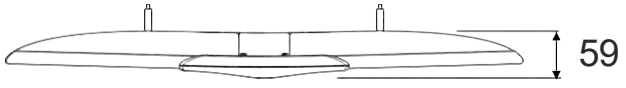

D-TEC
LIGHTING SYSTEMS

9. Clair dimensions

On-line support:http://d-tec.se/support

- Bruksanvisning
- Manuel d’utilisation

D-TEC LIGHTING SYSTEMS

Facts: Clair CL104

- High power - 200-
- 3000Lux/1.2m Up to 21325 Lumen
- 230V
- 3000-5700K CRI (Ra) 94
- 93 Dimmable
- Energy saving
- Remote control
- Size: 1530x670x59
- Weight: 16,3 kg

D-TEC AB
Varavägen 12
SE-465 94 Nossebro, Sweden
Phone: +46 (0)31-96 93 02
E-mail: mailbox@d-tec.se
www.d-tec.se

D-TEC
LIGHTING SYSTEMS

CE@